KLIEVERIK

VERTEX

HYBRID TRANSFER PRINTING CALENDER

The VERTEX has been designed as an ***entry level machine*** for efficient single piece transfer printing, but the calender is also capable of roll-to-roll printing. With sharp edge definition, a compact design and its oil filled heating drum, this calender is ideal for the multi-purpose print shop aiming at high quality.

The machine is optimized for ease of operation and is suitable for all kind of PES textiles. The blank pieces are laid down on the infeed table and transported to the front of the calender. Here the printed pieces can be collected from a box underneath. Tension control for the papers as well as for the textile is set by air pressure. A compact but state of the art touch screen panel provides easy control.

It is a typical Klieverik; robust design offering a long life time at low operating cost, the best oil-based heating system for very high temperature consistence and an ingenious belt tracking system for first time right production.

- Brilliant colours
- High print definition
- Affordable

Vertex
where all things cometogether

KLIEVERIK.COM

Best consistency,
ergonomic design.

VERTEX

HYBRID TRANSFER PRINTING CALENDER

Transfer printing calender for single pieces of textile as well as textile rolls. Working width 1650 mm/64,9". The drum is electrically heated with oil as the carrier medium for the highest quality print and reproducible products.

CHARACTERISTICS:

- Roller width 1850 mm/72.8" , working width 1650 mm/64.9"
- Drum diameter 195 mm/7.7"
- Mechanical speed 0,1 – 1,0 m/min
- Infeed table (table length +/- 63,5 cm/25"), with paper protection guard
- Protection paper unwind and winding position incl. tensioning device and shafts
- Transfer paper unwind and winding position incl. tensioning device and shafts
- Textile unwind suitable for 25,4 mm /1" and 76,2 mm /3" cores. Unwind and wind position with tensioning device and shafts
- High quality Nomex belt
- Stable belt guidance system to prevent movement of the material
- Short heating up time
- Pneumatic breaks
- Touch screen operation, 3.5" color touch screen panel.

THE PANEL OFFERS:

- Recipe creation, storage and retrieval for defined reproducible process settings
- Display of the significant selected parameters
- Cooling down timer

TECHNICAL SPECIFICATIONS

DIMENSIONS / WEIGHT	
Machine width	2572 mm/101.3"
Machine length	1409 mm/55.4"
Machine height	1318 mm/51.9"
Machine weight	± 1100 kg

DIAMETER / WIDTH	
Heating cylinder diameter	195 mm/7.7"
Maximum working width	1650 mm/64,9"
Substrate unwind diameter	250 mm/9.8"
Substrate rewind diameter	250 mm/9.8"
Maximum transfer paper width	1800 mm/70,8"
Transfer paper unwind diameter	250 mm/9.8"
Transfer paper rewind diameter	250 mm/9.8"
Maximum protective paper width	1800 mm/70,8"
Protective paper unwind diameter	250 mm/9.8"
Protective paper rewind diameter	250 mm/9.8"
Internal core diameter	76 mm/3"

INFEED TABLE	
Lenght infeed table	63,5 cm/25"

BLANKET	
Printing blanket width	1800 mm/70.9"
Printing blanket length	1676 mm/66"
Printing blanket thickness	6 mm/0.24"
Arc of contact blanket-cylinder	198°

TEMPERATURE/SPEED/AIR/PRESSURE/OIL	
Maximum temperature	220°C / 428°F
Mechanical speed	0,1 – 1,0 m/min
Air consumption	0,1 Nm3/hr
Air	6 bar max./G 1/4"
Oil capacity heating cylinder	± 37 l.

ELECTRICAL INFORMATION	
Amps req. at 400 VAC input (nom.)	16 Amp.
Total power	10 kW
Power heating	9 kW
Voltage	400 V
Number of phases	3ph/N
Frequency	50 / 60 Hz

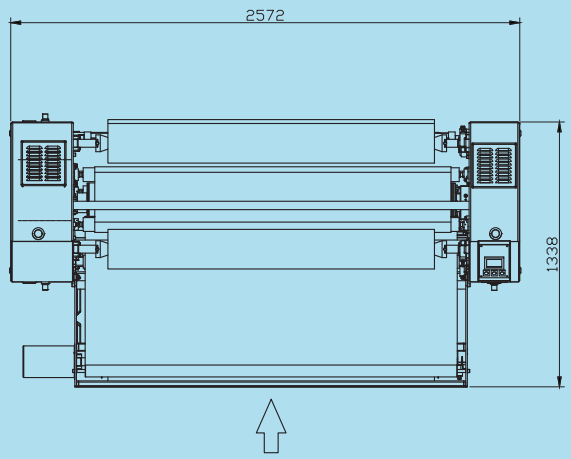

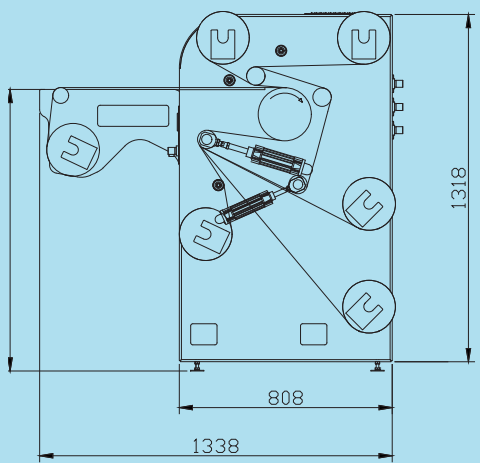

Klieverik Heli BV | Edisonstraat 8 | 7575 AT Oldenzaal | The Netherlands | Tel. +31 541 511 155 | E-mail. info@klieverik.com